GAMMA LINE
international

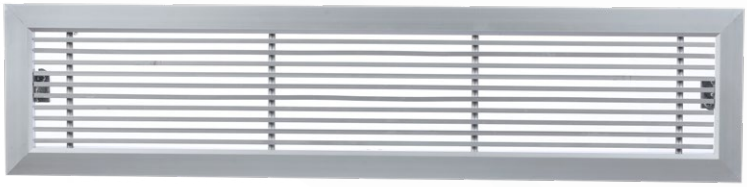

LINEAR BAR GRILLE

Simplicity & Functionality

LINEAR BAR GRILLE Type LG

FEATURES:

Linear Bar Grill manufactured by Gamma Line, model LG serves to either supply or return, facilitating air distribution throughout the air conditioning setup via walls, ceilings, and floors.

This stylish and effective option is utilized in both residential and commercial structures, including retail spaces, hotels, dining establishments, clubs, hospitals, and so forth.

The LG linear bar grilles are distinguished by their construction, impressive operational efficiency, minimal pressure drop, and noise levels.

المميزات الفنية:

فتحات الهواء ذات البارات الأفقية الثابتة طراز (LG) صنع شركة Gamma line تستخدم كفتحات تغذية أو رجوع للهواء و ذلك لتوزيع الهواء المكيف عبر الجدران و الأسقف و يمكن استخدامها كفتحات أرضية.

تقدم هذه الفتحات حل أنيق وعملي لتوزيع الهواء في تطبيقات مختلفة مثل المحلات التجارية ، الفنادق ، المطاعم ، غرف المحاضرات ، المشافي و غيرها.

فتحات الهواء ذات البارات الأفقية الثابتة نوع (LG) تتميز
بدقة تصنيعها و متانتها و شكلها الأنيق و انخفاض الضغط القليل لها و كذلك مستوى الضجيج المنخفض .

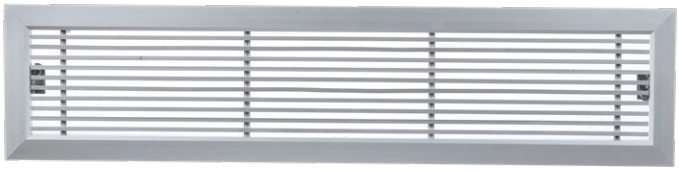

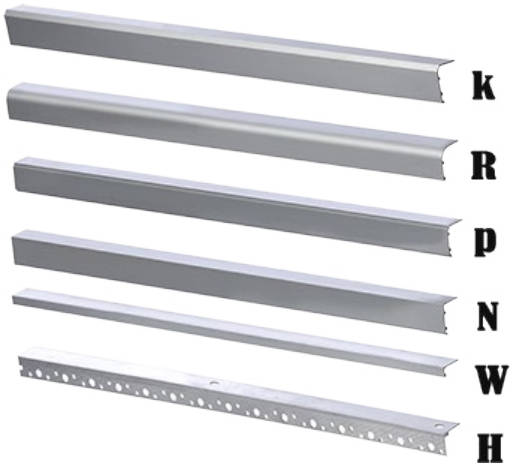

GAMMA LINE international

MATERIAL:

Bars and frames made from premium extruded aluminum profiles.

The assembly of the frame involves joining corners using connectors.

Together we produce a robust product.

المواد المستخدمة:

البارات و الإطار تصنع من بروفيلات الألمنيوم العالي الجودة

إطار الفتحة يتم تجميعه بطريقة الكبس لأطرافه الأربعة

التوصيف أعلاه يؤمن متانة كبيرة للفتحة .

DIMENSIONS:

LG Linear bar grille are available in various Dimension (B x H).
The minimum height (H) is 73 mm with a 13 mm pitch.
The maximum length (B) is 4500 mm.
The nominal dimensions of Linear Bar Grill B x H are included in the overall wall dimensions

الأبعاد:

فتحة الهواء ذات البارات الأفقية الثابتة طراز (LG)
تصنع بقياسات مختلفة .
الارتفاع الأصغر الممكن إنتاجه هو 73mm و بتباعد 13mm
الطول الأعظمي الممكن إنتاجه هو 4500mm .
أبعاد الفتحة الأسمية B X H تساوي الأبعاد الصافية للفراغ الذي سيتم تركيبها فيه .

ETL Testing Laboratories,Inc U.S.A
ISO 9001 Certified company
Intertek Testing Services ITS

AVAILABLE PRODUCTS:

LG Linear bar grilles are available as Multiple Frame shapes and Dimensions as shown below.

المنتجات المتوفرة:

فتحات الهواء ذات البارات الأفقية الثابتة يمكن تصنيعها كما يلي:
يمكن تصنيع إطار الفتحة بعدة أشكال و قياسات كما مبين أدناه.

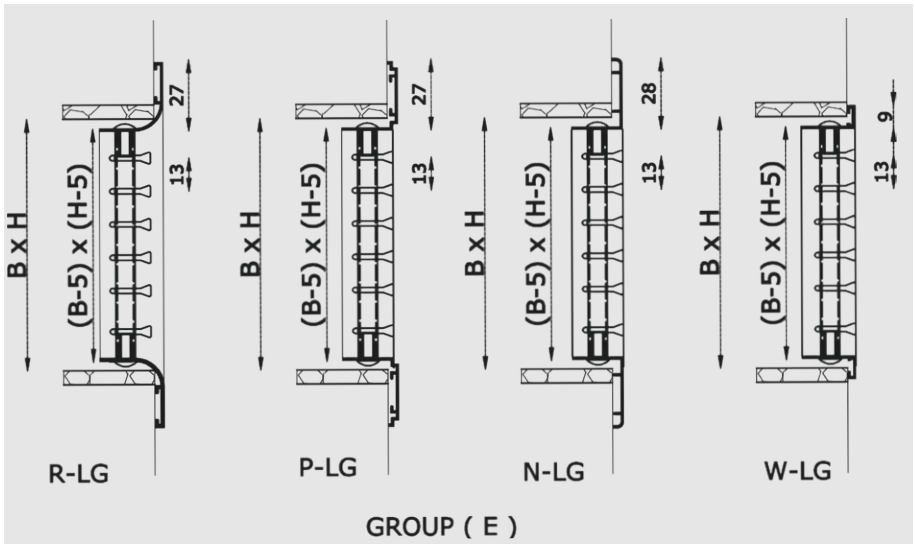

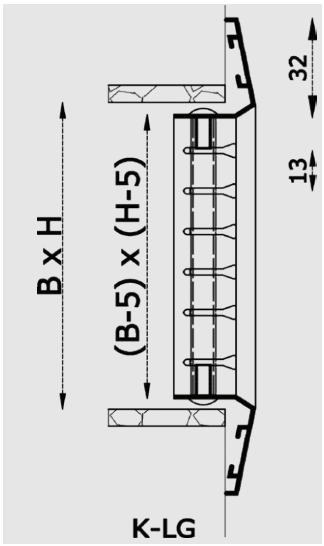

Horizontal Bars can be produced with (0) degree deflection Bar's pitch 13 mm

يمكن أن تصنع البارات الأفقية بزاوية إرسال للهواء (0) و تباعد 13 مم بين البارات .

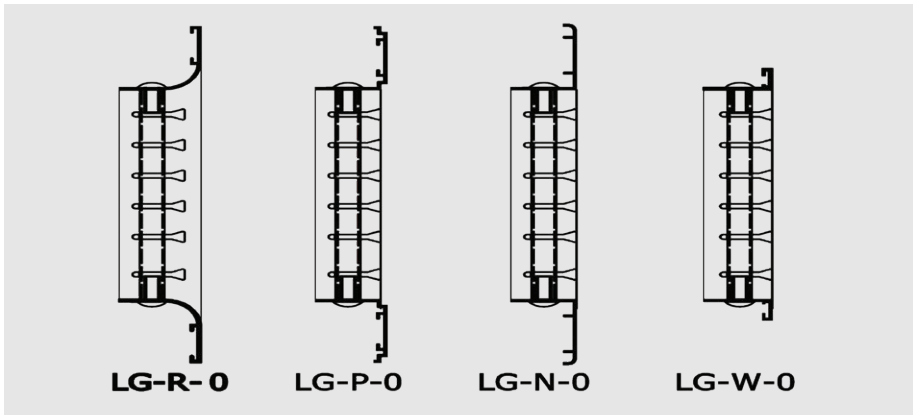

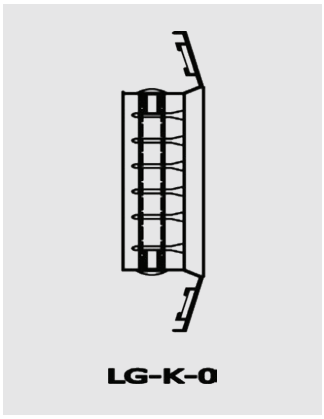

Horizontal Bars can be produced with (15) degree deflection Bar's pitch 13 mm

يمكن أن تصنع البارات الأفقية بزاوية إرسال للهواء (15) درجة و تباعد 13 مم بين البارات

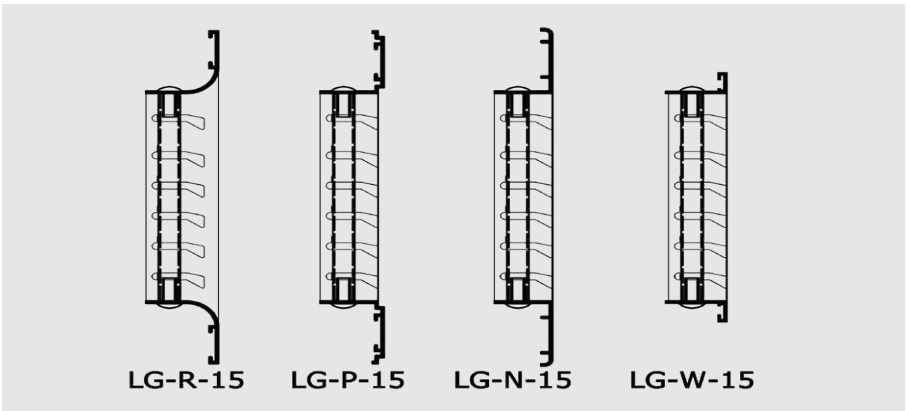

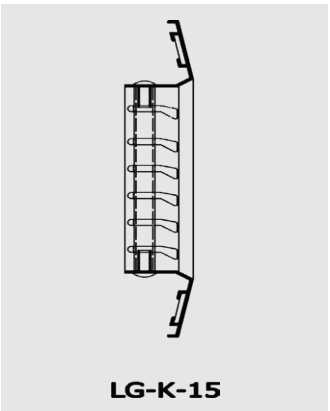

ETL Testing Laboratories,Inc U.S.A
ISO 9001 Certified company
Intertek Testing Services

Air Damper can be installed on the Linear Bar Grilles with (0) or (15) Bars deflection .

يمكن تطبيق معير هواء حجمي على الفتحة الخطية ذات البارات الأفقية الثابتة بزاوية (0) او (15) .

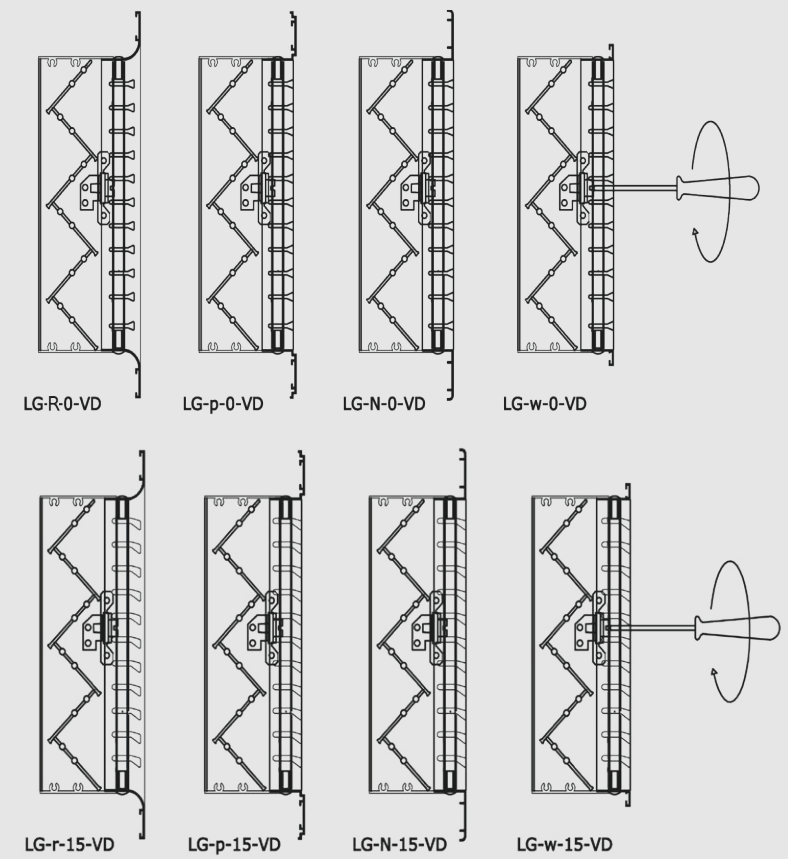

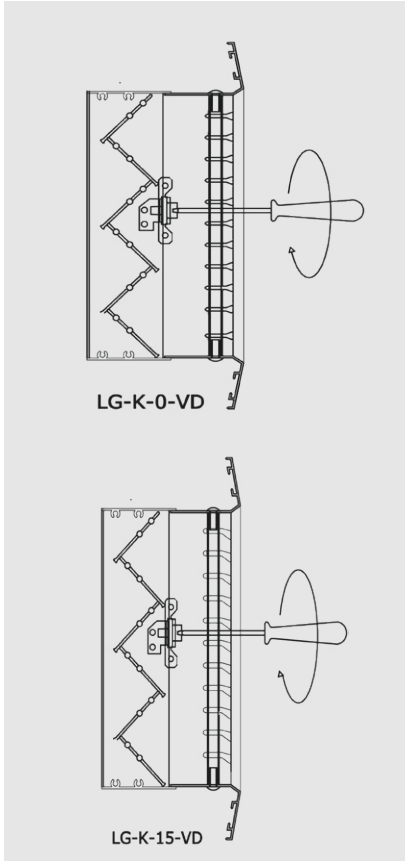

Rear deflecting blades can be installed verticaly behind the Bars which deflection is (0) or (15).

يمكن تطبيق شفرات توجيه عامودية خلف البارات الأفقية الثابتة بزاوية (0) او (15) .

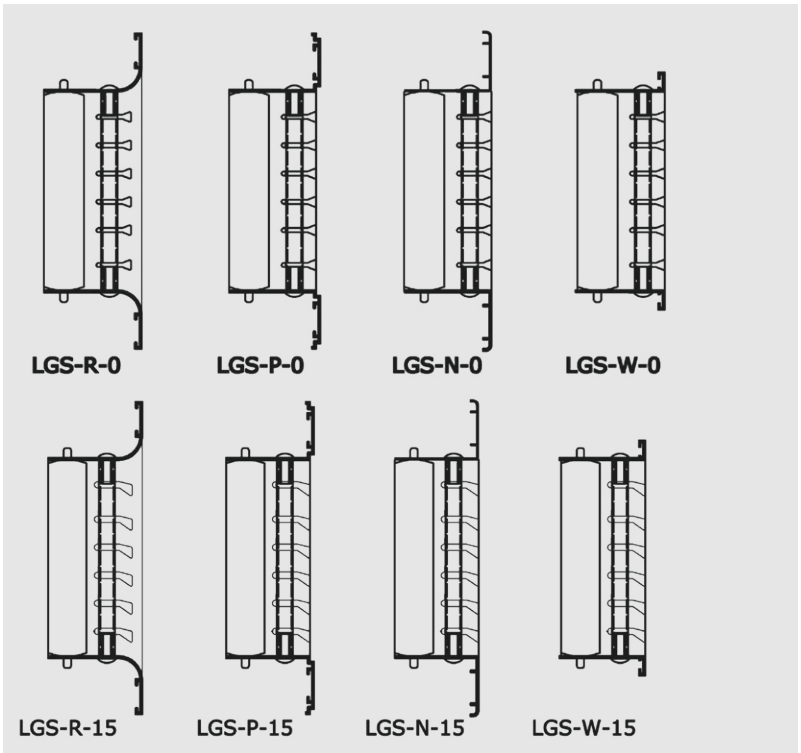

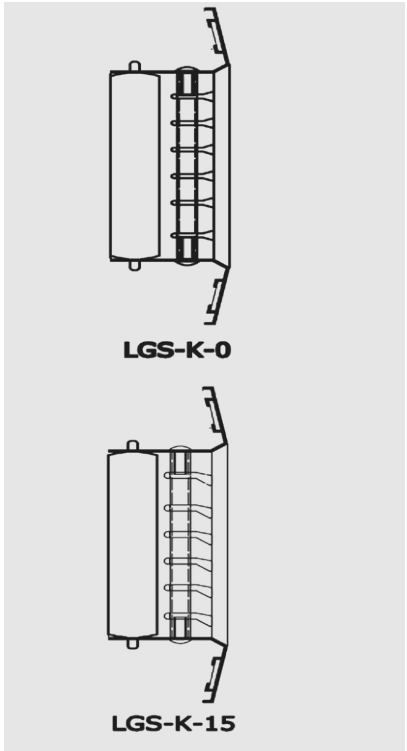

ETL Testing Laboratories,Inc U.S.A
ISO 9001 Certified company
Intertek Testing Services

LINEAR BAR GRILLE Type LG

Flexible pipe brackets are used on Flexible Floor Bar Grille with (0) or (15) deflection the bars are fixed verticaly on it .
The grill flexibilty makes it easy to remove and plenum floor box cleaning.

الفتحات الأرضية المرنة مصنعة من حوامل طولية مرنة يثبت عليها بشكل عمودي بارات أفقية ثابتة على الزاوية (0) او (15) .
مرونة الفتحة الأرضية تؤمن سهولة في رفع و تنظيف العلبة الأرضية المركبة عليها.

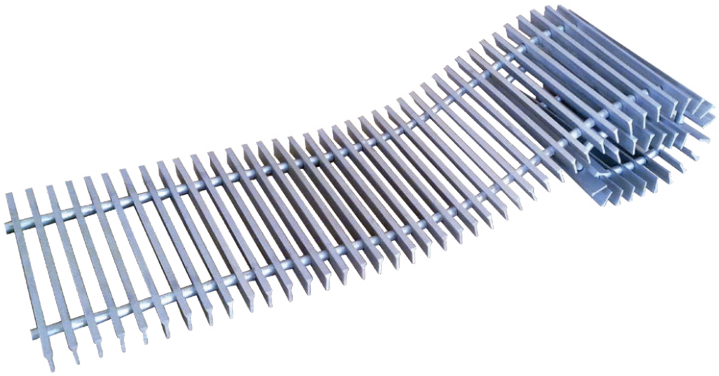

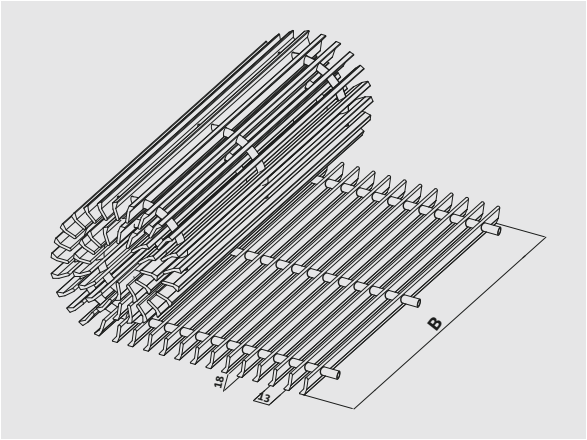

Linear Bar Grille Hatch with (0) or (15) bars deflection is used as mantainance hatch or is utilized when the grille is accompanied by filter for convenient access or to clean the filter.

بوابة ذات البارات الأفقية الثابتة على الزاوية(0) او (15) يمكن استخدامها كفتحة صيانة او عند طلب الفتحة مع فلتر لسهولة الوصول للفتلر للصيانة أو الاستبدال.

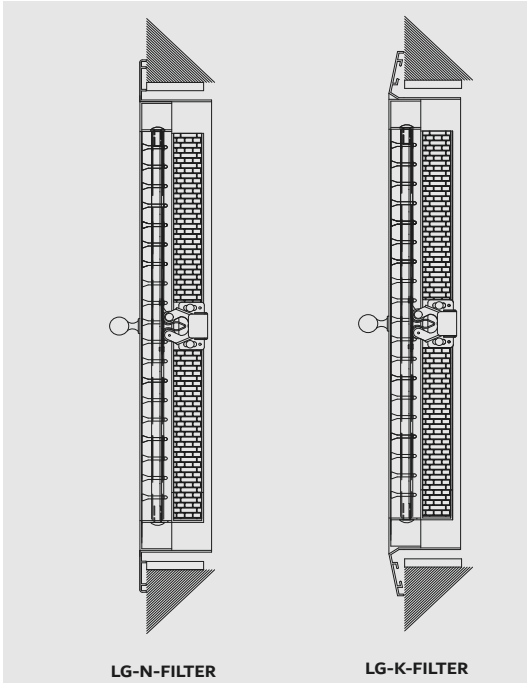



ETL Testing Laboratories,Inc U.S.A
ISO 9001 Certified company
ITS Intertek Testing Services

Linear Bar Grille with (0) or (15) deflection bars can be manufactured as curved (in or out) on the side walls or curved on ceiling surface.
Minimium diameter curve can be applied is 2500mm

يمكن تصنيع الفتحة الخطية ذات البارات الأفقية الثابتة على الزاوية (0(أو (15) بشكل منحني خارجي أو داخلي او في مستوى السطح .
أصغر قطر انحناء يمكن تصنيعه هو 2500مم.



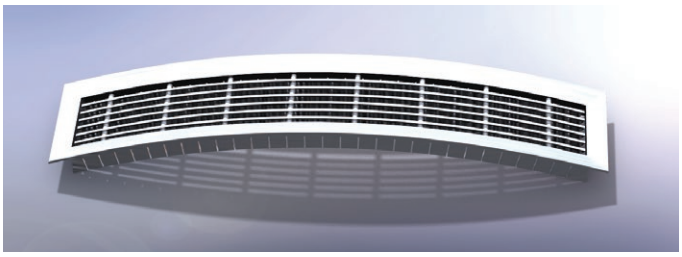

ACCESORIES:

المتممات

Fixing Tools:
using screw that apears on the grille frame (ST)
using our Concealed mechanism (CO)

يمكن تثبيت الفتحة:
بواسطة براغي ظاهرة على إطار الفتحة (ST)
تثبيت مخفي بواسطة آلية خاصة بنا (CO)

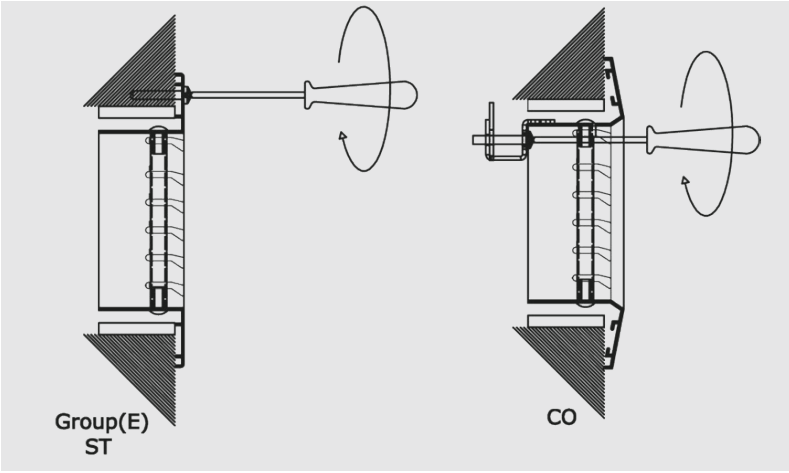

Galvenized Steel Wire mesh can be applied to Linear bar grille with (0) or (15) deflection to avoid introduction of rodents (MG) .

يمكن تزويد الفتحة الخطية ذات البارات الأفقية الثابتة على الزاوية (0) أو (15) بشبك من الفولاذ لمنع القوارض (MG).

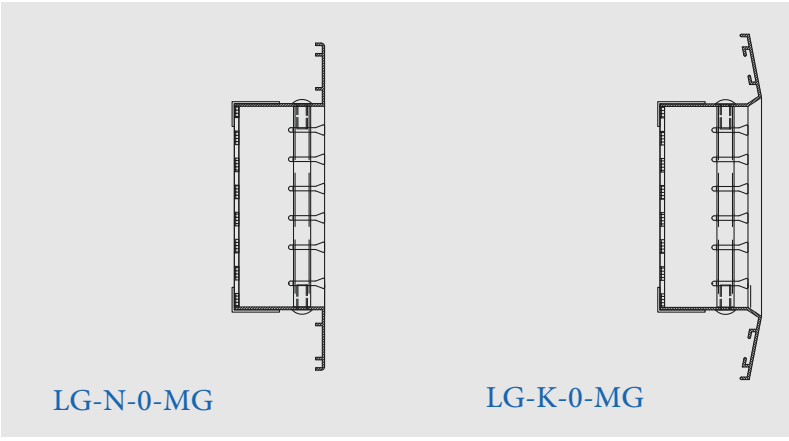

ETL Testing Laboratories,Inc U.S.A
ISO 9001 Certified company
Intertek Testing Services

FINISHING:

These grills are available in a natural anodized Aluminum hue, or the grill surfaces will be processed and then finished with electrostatic powder coating in RAL colors, and enameled stove

الإنهاء:

يمكن إنتاج هذا النوع من الفتحات بلون الألمنيوم المؤكسد فضي الطبيعي أو تتم معالجة الأسطح ثم طلائها باستخدام البودرة الحرارية، ثم الشواء بالفرن، اللون القياسي المستخدم هو أي لون من مجموعة RAL.

TECHNICAL CHARACTERISTICS :

Performance table displays
AIR throw measured in meters.
Pressure drop measured in Pascal.
Noise level measured in decibels.
Depending on a certain air flow passing through a Grille with BxH dimensions.
The parameters are for supply grilles with temperature difference of 10 degree Celsius between supply air and room temperature, in a cooling cycle.

When volume control Damper is partially closed for balancing or controlling air flow along with pressure drop and sound correction, the throw pattern will be reduced by 10 to 18% depending on the amount of throttling . Pressure drop will increase accordingly.

المواصفات الفنية :

جدول المواصفات الفنية يبين
مسافة قذف الهواء بالمتر .
انخفاض الضغط بالباسكال.
مستوى الضجيج بالدسبل.
و ذلك لتدفق هواء معين يمر عبر فتحة الهواء بأبعاد (B X H)

القيم المذكورة هي لفتحات التغذية و عند فرق درجة الحرارة في دورة التبريد بين هواء التغذية و هواء الغرفة يبلغ 10درجات مئوية.

عند إغلاق معير الهواء جزئيا لتحقيق التوازن و التحكم بتدفق الهواء بالإضافةللتأثر الحاصل على فرق الضغط و الضجيج في الفتحة ستتأثر مسافة قذف الهواء بنسبة بين 10 إلى 18 % اعتمادا على مقدرا انغلاق المعير . كما سيزداد انخفاض الضغط وفقا لذلك.

AIR THROW :

The horizontal distance where the air flow velocity reached 0.25 m/s, which normally should be ¾ of the room distance.

قذف الهواء :

هو المسافة الأفقية التي يقطعها تيار الهواء حتى يصل لسرعة 0.25m/s و التي يفضل أن تكون مساوية لـ 4/3 مسافة الغرفة .

GRILL SELECTION :

For a required air flow, please select the grill from the performance table according to the throw, pressure drop, and noise level.

اختيار الفتحة :

يتم اختيار الفتحة المناسبة لتدفق الهواء المطلوب من جدول الاختيار بدلالة مسافة قذف الهواء ، انخفاض الضغط في الفتحة ومستوى الضجيج لها .

ETL Testing Laboratories,Inc U.S.A
ISO 9001 Certified company
Intertek Testing Services

GAMMA LINE international

AIR DROP :

There are numerous factors that influence the descent such as supply air temperature, room air temperature, position of the grille towards the ceiling, air speed, and the local drafts.
For air flow thrown in a large area, descent could be estimated from the equation:

$$D = C * (X)$$

D: The descent in m.
C: A coefficient associated with the air velocity, listed in table below:
X: The air throw indicated in the performance table .

هبوط الهواء:

هناك العديد من العوامل المؤثرة على الهبوط مثل درجة حرارة هـواء التغذية ، درجة حـرارة هـواء الغرفة، بعد الفتحـة عن السقف سرعة الهواء ، التيارات المحلية.

لتدفق هواء إلى فراغ كبير يمكن تقدير الهبوط كالتالي:

D : هو الهبوط بالمتر.
C : هو معامل يؤخذ من أدناه.
X : هو قذف الهواء و يؤخذ من جدول المواصفات الفنية

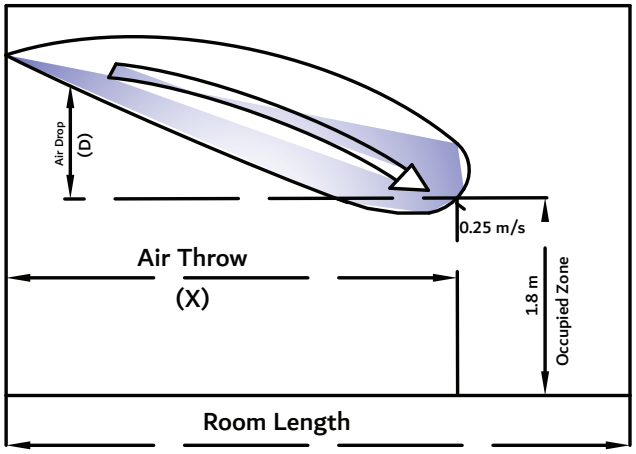

V_K m/s	1.5	2	2.5	3	3.5	4	4.5	5	6	7
C	0.11	0.063	0.047	0.039	0.031	0.025	0.019	0.016	0.012	0.01

OCCUPIED ZONE:

Is the section of the atmosphere located between the ground, and 1800 mm height .

الحيز المشغول:

هو الحيـز من الفراغ الواقـع بين أرضيـة الغرفـة و أرتفـاع 1800mm عنها .

EXAMPLE:

For an air flow of 0.167 m3/s, passing through 600 x125 mm grill:
From (subsequent table) X= 10.5 m,
from (preceding table) C= 0.019,
and the drop will be: D = 0.019*10.5 = 0.1995

مثال:

لتدفق هواء 0.167m3/s عبر فتحة 600x125 مم

من الجدول التالي X = 10.5m
من الجدول أعلاه C = 0.019
D = 0.019*10.5 = 0.1995

GRILL SELECTION :

For a required air flow, please select the grill from the performance table according to the throw, pressure drop, and noise level.

اختيار الفتحة :

يتم اختيار الفتحة المناسبة لتدفق الهواء المطلوب من جدول الاختيار بدلالة مسافة قذف الهواء ، انخفاض الضغط في الفتحة ومستوى الضجيج لها .

ETL Testing Laboratories,Inc U.S.A
ISO 9001 Certified company
Intertek Testing Services

U.S.A ETL CERTIFICATE:

شهادات ETL الخاصة بالمنتج:

Intertek

REPORT

3933 US ROUTE 11 CORTLAND, NEW YORK 13045

Order No. 100346287 Date: April 29, 2011

REPORT NO. 100346287CRT-002a

STATIC PRESSURE, SOUND POWER LEVEL, AREA FACTOR AND THROW TESTS ON A 1000 mm BY 90 mm LINEAR BAR GRILLE

RENDERED TO

GAMMA LINE INTERNATIONAL
P.O. BOX 92833, RIYADH 11663
KINGDOM OF SAUDI ARABIA

INTRODUCTION

This report gives the results of tests conducted on a 1000 mm by 90 mm linear bar grille. The test results include Static Pressure, Area Factor, Throw and Sound Power Level. The sample was selected and supplied by Century Mechanical Systems and was received at the laboratories on March 23, 2011. The sample appeared to be in new unused condition upon receipt.

AUTHORIZATION

Signed Intertek Quotation No. 500281404.

TEST METHOD

The sample was tested in accordance with the ASHRAE 70-2006 Standard "Method of Testing for Rating the Performance of Air Outlets and Inlets", which incorporates ADC 1062: GRD-84 Test Code for Grilles, Registers and Diffusers. Acoustical data was obtained employing a Bruel & Kjaer Pulse Digital Frequency Analyzer and analyzed on a Compaq Computer. The reference sound source used for this test was a calibrated Bruel & Kjaer Type 4204, which conforms to the above standard. The octave band sound power levels were plotted on graph of Noise Criteria Curves which is in the ADC Test Code. These curves are reprinted with permission from the ASHRAE Handbook and Product Directory, 1976. The sample was installed in the facility and supplied with measured volumes of air. The static pressure was measured 1½ duct diameters upstream of the inlet.

This report is for the exclusive use of Intertek's Client and is provided pursuant to the agreement between Intertek and its Client. Intertek's responsibility and liability are limited to the terms and conditions of the agreement. Intertek assumes no liability to any party, other than to the Client in accordance with the agreement, for any loss, expense or damage occasioned by the use of this report. Only the Client is authorized to copy or distribute this report and then only in its entirety. Any use of the Intertek name or one of its marks for the sale or advertisement of the tested material, product or service must first be approved in writing by Intertek. The observations and test results in this report are relevant only to the sample tested. This report by itself does not imply that the material, product, or service is or has ever been under an Intertek certification program. Measurement uncertainty budgets have been determined for applicable test methods and are available upon request.

Intertek

REPORT

3933 US ROUTE 11 CORTLAND, NEW YORK 13045

Order No. 100346287 Date: April 29, 2011

REPORT NO. 100346287CRT-002b

STATIC PRESSURE, SOUND POWER LEVEL, AREA FACTOR AND THROW TESTS ON A 1000 mm BY 150 mm LINEAR BAR GRILLE

RENDERED TO

GAMMA LINE INTERNATIONAL
P.O. BOX 92833, RIYADH 11663
KINGDOM OF SAUDI ARABIA

INTRODUCTION

This report gives the results of tests conducted on a 1000 mm by 150 mm linear bar grille. The test results include Static Pressure, Area Factor, Throw and Sound Power Level. The sample was selected and supplied by Century Mechanical Systems and was received at the laboratories on March 23, 2011. The sample appeared to be in new unused condition upon receipt.

AUTHORIZATION

Signed Intertek Quotation No. 500281404.

TEST METHOD

The sample was tested in accordance with the ASHRAE 70-2006 Standard "Method of Testing for Rating the Performance of Air Outlets and Inlets", which incorporates ADC 1062: GRD-84 Test Code for Grilles, Registers and Diffusers. Acoustical data was obtained employing a Bruel & Kjaer Pulse Digital Frequency Analyzer and analyzed on a Compaq Computer. The reference sound source used for this test was a calibrated Bruel & Kjaer Type 4204, which conforms to the above standard. The octave band sound power levels were plotted on graph of Noise Criteria Curves which is in the ADC Test Code. These curves are reprinted with permission from the ASHRAE Handbook and Product Directory, 1976. The sample was installed in the facility and supplied with measured volumes of air. The static pressure was measured 1½ duct diameters upstream of the inlet.

This report is for the exclusive use of Intertek's Client and is provided pursuant to the agreement between Intertek and its Client. Intertek's responsibility and liability are limited to the terms and conditions of the agreement. Intertek assumes no liability to any party, other than to the Client in accordance with the agreement, for any loss, expense or damage occasioned by the use of this report. Only the Client is authorized to copy or distribute this report and then only in its entirety. Any use of the Intertek name or one of its marks for the sale or advertisement of the tested material, product or service must first be approved in writing by Intertek. The observations and test results in this report are relevant only to the sample tested. This report by itself does not imply that the material, product, or service is or has ever been under an Intertek certification program. Measurement uncertainty budgets have been determined for applicable test methods and are available upon request.

ETL Testing Laboratories,Inc U.S.A
ISO 9001 Certified company
Intertek Testing Services

TECHNICAL SPECIFICATION

المواصفات الفنية

GAMMA LINE international

V		HxB	Throw (x) in m	Effective velocity	Pressure drop	NR
m3/h	m3/s	mm	at 0.25 m/s	m/s	Pa	dB
100	0.028	73x200	8.7	4.2	11	30
		73x300	4.0	2.7	5	23
		100x200	4.7	3.0	6	25
150	0.042	73x300	7.9	4.0	10	29
		73x400	4.8	2.9	6	25
		73x500	3.2	2.4	4	22
		100x200	10.3	4.5	13	32
		100x300	4.8	2.9	6	25
200	0.056	73x400	7.9	3.9	10	29
		73x500	5.6	3.2	7	26
		73x600	4.0	2.6	5	23
		100x200	18.2	6.0	23	37
		100x300	7.1	3.8	9	29
		100x400	4.0	2.8	5	23
		125x300	4.8	3.1	6	25
300	0.083	73x500	11.1	4.7	14	32
		73x600	8.0	3.9	10	29
		73x800	4.8	2.9	6	25
		100x400	8.8	4.2	11	30
		100x500	6.4	3.4	8	28
		100x600	4.0	2.8	5	23
		125x300	11.1	4.6	14	32
		125x400	6.4	3.4	8	28
		125x500	4.0	2.7	5	23
400	0.111	73x800	8.0	3.9	10	29
		73x1000	4.8	3.1	6	25
		100x500	10.4	4.5	13	32
		100x600	7.2	3.7	9	29
		100x800	4.0	2.8	5	23
		100x1000	2.5	2.2	3	19
		125x400	10.4	4.5	13	32
		125x600	4.8	3.0	6	25
		125x800	3.2	2.2	4	22
		150x400	7.2	3.8	9	29
		150x500	4.8	3.1	6	25
		150x600	3.2	2.5	4	22
500	0.139	100x600	11.2	4.7	14	32
		100x800	6.5	3.5	8	28
		100x1000	4.1	2.8	5	23
		125x400	16.0	5.6	20	35
		125x600	7.3	3.8	9	29
		125x800	4.1	2.8	5	23
		125x1000	3.3	2.2	4	22
		150x400	11.2	4.7	14	32
		150x600	5.7	3.1	7	26
		150x800	3.3	2.4	4	22
		150x1000	2.5	1.9	3	19

ETL Testing Laboratories,Inc U.S.A
ISO 9001 Certified company
Intertek Testing Services

LINEAR BAR GRILLE Type LG

V		HxB	Throw (x) in m	Effective velocity	Pressure drop	NR
m3/h	m3/s	mm	at 0.25 m/s	m/s	Pa	dB
600	0.167	73x1000	10.5	4.6	13	32
		100x800	8.9	4.2	11	30
		100x1000	5.7	3.3	7	26
		125x600	10.5	4.5	13	32
		125x800	5.7	3.4	7	26
		125x1000	4.1	2.7	5	23
		150x600	7.3	3.8	9	29
		150x800	4.1	2.8	5	23
		150x1000	3.3	2.2	4	22
		203x600	4.1	2.8	5	23
800	0.222	100x1000	9.8	4.4	12	31
		125x800	10.6	4.5	13	32
		125x1000	6.6	3.5	8	28
		150x600	13.0	5.0	16	34
		150x800	7.4	3.8	9	29
		150x1000	5.0	3.0	6	25
		203x600	7.4	3.7	9	29
		203x800	4.2	2.8	5	23
		203x1000	2.5	2.2	3	19
		297x500	5.0	3.0	6	25
		297x600	3.4	2.5	4	22
1000	0.278	125x800	16.3	5.6	20	35
		125x1000	10.7	4.4	13	32
		150x800	11.5	4.7	14	32
		150x1000	7.5	3.7	9	29
		203x800	6.7	3.4	8	28
		203x1000	4.2	2.7	5	23
		297x500	7.5	3.8	9	29
		297x600	5.0	3.1	6	25
1500	0.412	150x1000	15.8	5.6	19	35
		203x800	14.2	5.2	17	34
		203x1000	9.3	4.1	11	30
		255x600	11.8	4.7	14	32
		255x800	6.9	3.5	8	28
		297x600	11.8	4.7	14	32
		297x800	6.9	3.5	8	28
2000	0.556	255x800	12.0	4.7	14	32
		255x1000	7.9	3.7	9	29
		297x800	12.0	4.7	14	32
		297x1000	7.9	3.7	9	29

ETL Testing Laboratories,Inc U.S.A
ISO 9001 Certified company
Intertek Testing Services

SYRIA ARAB REPUBLIC

33435, Damascus, Syria

+963 11 585 1200

+963 94 063 0063

info.sy@gammaline.com

GAMMA LINE international