GAMMA LINE
international

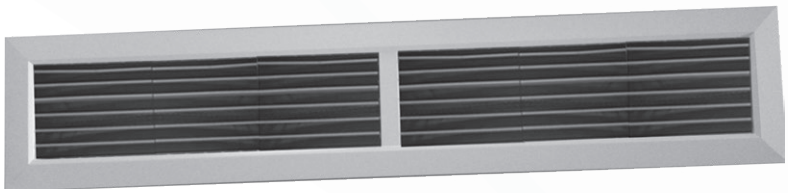

SINGLE DEFLECTION GRILLE

Basic & Functional

SINGLE DEFLECTION GRILLE Type SGI

FEATURES:

Gamma line manufactures Single deflection Grilles (SGI) designed to distribute air from wall-mounted air conditioning units.

These grilles consist of one set of blades that deflect the air horizontaly or verticaly and can be manually adjusted individually to efficiently distribute and direct air to the intended space.
To prevent vibration, these blades are fitted with a strudy steel wire.
SGI grilles can be used as supply or return grilles mounted on the wall.

SGI grilles are precisely made to provide adaptable diffusion, low pressure drops, and minimal noise levels.

المميزات الفنية:

فتحات الهواء ذات صف واحد من الشفرات المتحركة القابلة للتوجيه صنع شركة GAMMALINE طراز SGI تستخدم لتوزيع الهواء في أنظمة التكييف عبر الجدار .

تتميز هذه الفتحات بصف واحد من الشفرات المتحركة لتوجيه الهواء أفقيا أو شاقوليا و يمكن ضبطها يدويا كلا على حدة لتوزيع الهواء بشكل فعال و توجيهه إلى المساحة المراد تكييفها.

تزود الشفرات بسلك فولاذي غير قابل للصدأ ذو عمر مديد لضمان عدم اهتزازها.
يمكن استخدام هذه الفتحات كفتحات دفع أو رجوع جداريه.

تتميز فتحات تغذية وسحب الهواء طراز SGI بدقة تصنيعها ومتانتها و مرونة توزيع الهواء وانخفاض الضغط القليل لها ، وكذلك تؤمن الحد الأدنى من مستويات الضجيج.

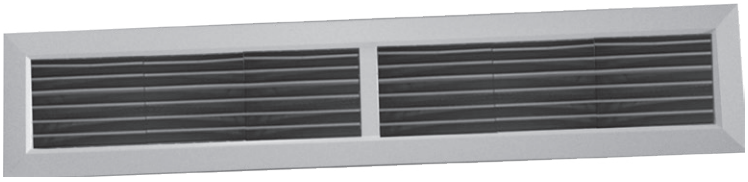

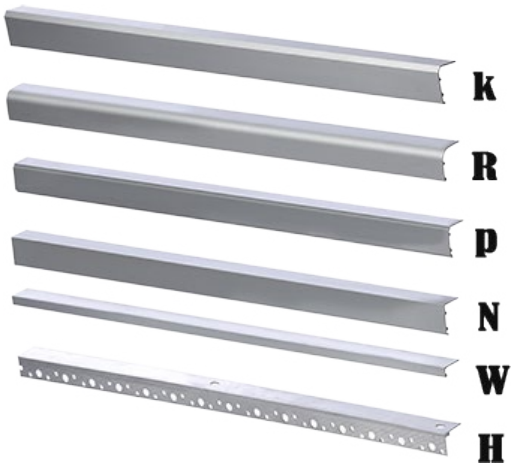

GAMMA LINE international

MATERIAL:

Single Deflection Grilles from Gamma Line feature:
- Blades and frames made of high quality extruded aluminum profiles.
- The frame is assembled by pressing on the links in the four corners
-Steel Wire helps to equip the blades..
Together we produce a durable product.

المواد المستخدمة:

فتحات الهواء ذات صف واحد من الشفرات المتحركة مصنع من :

- الشفرات و الإطار تصنع من بروفيلات الألمنيوم المسحوبة و العالية الجودة .

- إطار الفتحة يتم تجميعه بطريقة الكبس لأطرافه الأربعة.

-شريط فولاذي يربط الشفرات ليخفف الاهتزاز.
التوصيف أعلاه يؤمن متانة كبيرة للفتحة .

DIMENSIONS:

SGI Single Deflection grille come in various Dimension (B x H).
The minimum height (H) is 73 mm .
The maximum length (B) is 4500 mm.
B x H nominal dimensions are related to the part of the wall dimensions.

الأبعاد:

فتحة الهواء ذات صف واحد من الشفرات المتحركة طراز (SGI)
تصنع بقياسات مختلفة .
الارتفاع الأصغر الممكن إنتاجه هو 73mm
الطول الأعظمي الممكن إنتاجه هو 4500mm .
أبعاد الفتحة الأسمية B X H تساوي الأبعاد الصافية
للفراغ الذي سيتم تركيبها فيه .

ETL Testing Laboratories,Inc U.S.A
ISO 9001 Certified company
Intertek Testing Services

AVAILABLE PRODUCTS:

المنتجات المتوفرة:

SGI Single Deflection grilles are available as

فتحات الهواء ذات صف واحد من الشفرات المتحركة طراز SGI يمكن تصنيعها كما يلي:

- Single Horizontal Deflection Grille SGI-H WITH Blades pich 20 mm.

- فتحة ذات صف واحد من الشفرات الأفقية المتحركة SGI-H ذو خطوة بين الشفرات 20 مم.

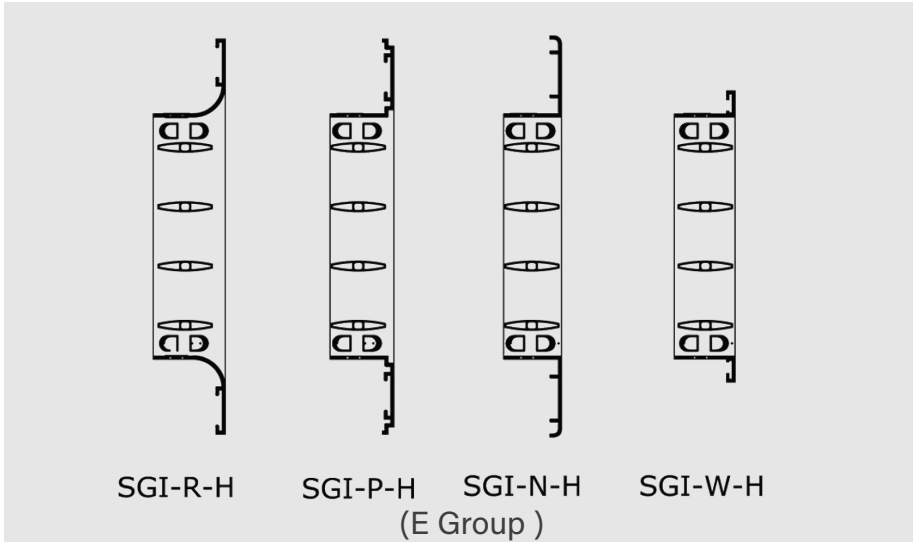

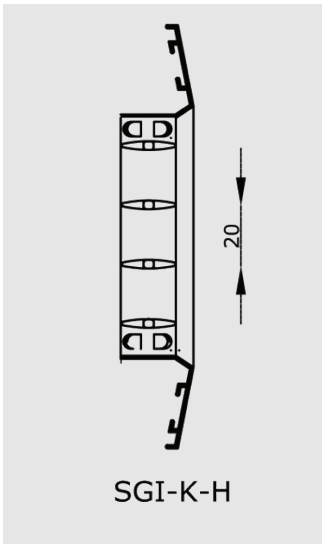

- Single vertical Deflection Grille SGI-V WITH Blades pich 20 mm.

- فتحة ذات صف واحد من الشفرات العامودية المتحركة SGI-V ذو خطوة بين الشفرات 20 مم.

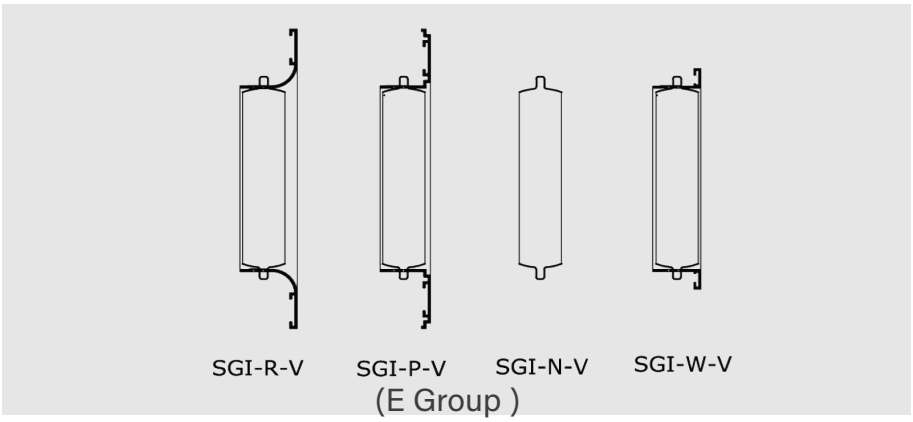

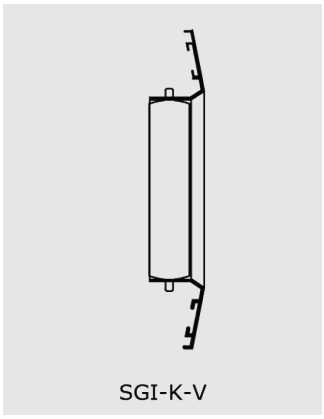

- Air Damper can be installed on Single Deflection Grilles .

-يمكن تطبيق معير هواء حجمي على الفتحة ذات صف واحد من الشفرات المتحركة.

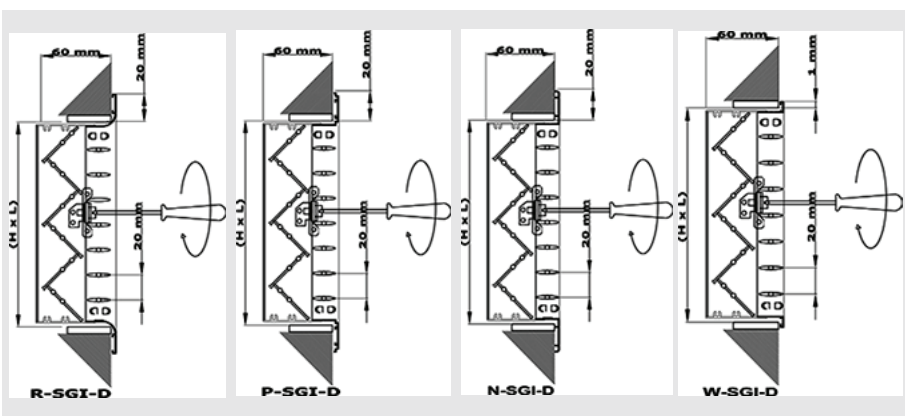

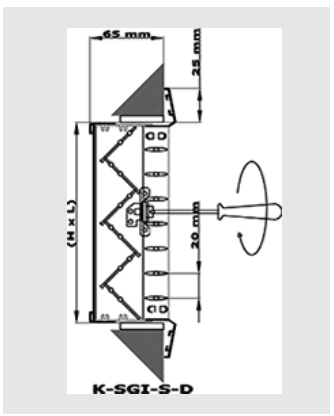

ETL Testing Laboratories,Inc U.S.A
ISO 9001 Certified company
Intertek Testing Services

ACCESORIES:

المتممات

Fixing Tools:
using screw that apears on the grille frame (ST)
using our Concealed mechanism (CO)

يمكن تثبيت الفتحة:
بواسطة براغي ظاهرة على إطار الفتحة (ST)
تثبيت مخفي بواسطة آلية خاصة بنا (CO)

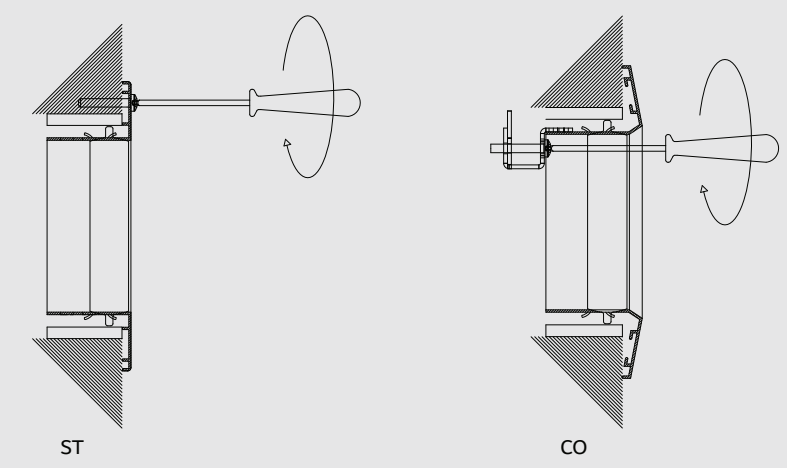

- Galvenized Steel Wire mesh can be applied to Single deflection grille to avoid introduction of rodents and birds (MG) .

- يمكن تزويد الفتحة ذات صف واحد من الشفرات المتحركة بشبك من الفولاذ للحماية من القوارض و الطيور (MG).

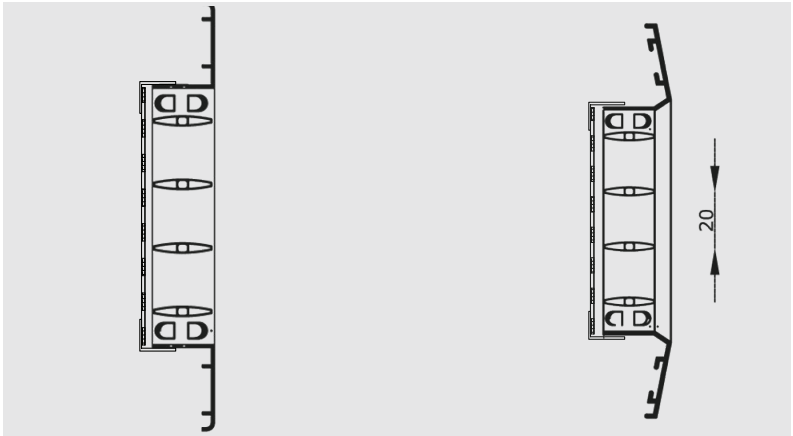

CONSTRUCTION DETAILS:

تفاصيل فنية:

- If grill's dimensions is over 400 mm,
a U supporter will be added at the center of the grill.
- If grill's dimensions is over 800 mm,
U supporters will be added equidistantly.

- في حال كون أحد أبعاد الفتحة أكثر من 400mm
يتم إضافة داعم يتم تثبيته في منصف الفتحة .
- وفي حال كون أحد أبعاد الفتحة أكثر من 800mm
يتم إضافة هذه الدعائم بمسافات متساوية .

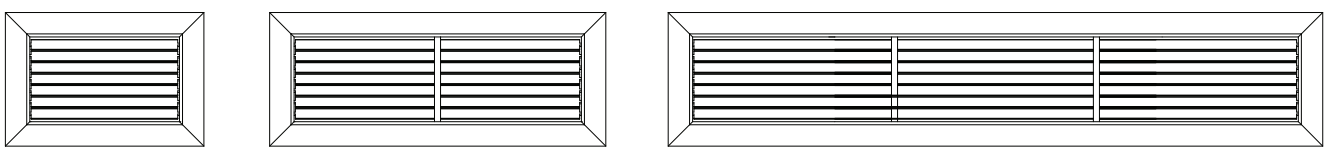

ETL Testing Laboratories,Inc U.S.A
ISO 9001 Certified company
Intertek Testing Services

FINISHING:

These grills are available in Aluminum natural anodized color, or the grill surfaces can be treated and finished with electrostatic powder coating in RAL colors, and curing oven

الإنهاء:

يمكن إنتاج هذا النوع من الفتحات بلون الألمنيوم المؤكسد فضي الطبيعي أو تتم معالجة الأسطح ثم طلائها باستخدام البودرة الالكتروستاتيكية الحرارية، ثم الشواء بالفرن، اللون القياسي المستخدم هو أي لون من مجموعة RAL.

TECHNICAL CHARACTERISTICS :

Performance table displays
AIR throw measured in meters.
Pressure drop measured in Pascal.
Noise level measured in decibels.
Depending on a certain air flow passing through a Grille with BxH dimensions.

The parameters are for supply grilles with temperature difference of 10 degree Celsius between supply air and room temperature, in a cooling cycle.

When volume control Damper is partially closed for balancing or controlling air flow along with pressure drop and sound correction, the throw pattern will be reduced by 10 to 18% depending on the amount of throttling . Pressure drop will increase accordingly.

المواصفات الفنية :

جدول المواصفات الفنية يبين
مسافة قذف الهواء بالمتر .
انخفاض الضغط بالباسكال.
مستوى الضجيج بالدسبل.
و ذلك لتدفق هواء معين يمر عبر فتحة الهواء بأبعاد (B X H)

القيم المذكورة هي لفتحات التغذية و عند فرق درجة الحرارة في دورة التبريد بين هواء التغذية و هواء الغرفة يبلغ 10درجات مئوية.

عند إغلاق معير الهواء جزئيا لتحقيق التوازن و التحكم بتدفق الهواء بالإضافةللتأثر الحاصل على فرق الضغط و الضجيج في الفتحة ستتأثر مسافة قذف الهواء بنسبة بين 10 إلى 18 % اعتمادا على مقدرا انغلاق المعير . كما سيزداد انخفاض الضغط وفقا لذلك.

AIR THROW :

The horizontal distance where the air flow velocity reached 0.25 m/s, which normally should be ¾ of the room distance.

قذف الهواء :

هو المسافة الأفقية التي يقطعها تيار الهواء حتى يصل لسرعة 0.25m/s و التي يفضل أن تكون مساوية لـ 4/3 مسافة الغرفة .

ETL Testing Laboratories,Inc U.S.A
ISO 9001 Certified company
Intertek Testing Services

GAMMA LINE international

AIR DROP :

There are numerous factors that influence the descent such as supply air temperature, room air temperature, position of the grille towards the ceiling, air speed, and the local drafts.
For air flow thrown in a large area, descent could be estimated from the equation:

$$D = C * (X)$$

D: The descent in m.
C: A coefficient associated with the air velocity, listed in table below:
X: The air throw indicated in the performance table .

هبوط الهواء:

هناك العديد من العوامل المؤثرة على الهبوط مثل درجة حرارة هـواء التغذية ، درجة حـرارة هـواء الغرفة، بعد الفتحـة عن السقف سرعة الهواء ، التيارات المحلية.

لتدفق هواء إلى فراغ كبير يمكن تقدير الهبوط كالتالي:

D : هو الهبوط بالمتر.
C : هو معامل يؤخذ من أدناه.
X : هو قذف الهواء و يؤخذ من جدول المواصفات الفنية

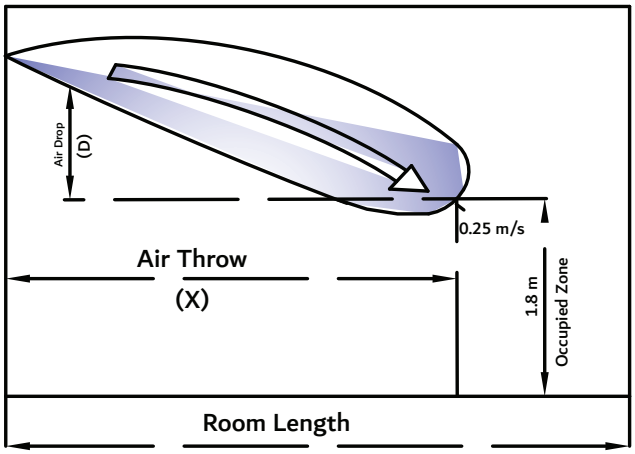

V_K m/s	1.5	2	2.5	3	3.5	4	4.5	5	6	7
C	0.11	0.063	0.047	0.039	0.031	0.025	0.019	0.016	0.012	0.01

OCCUPIED ZONE:

Is the section of the atmosphere located between the ground, and 1800 mm height .

الحيز المشغول:

هو الحيـز من الفراغ الواقـع بين أرضيـة الغرفـة و أرتفـاع 1800mm عنها .

EXAMPLE:

For an air flow of 0.167 m3/s, passing through 500 x150 mm grill:
From (subsequent table) X= 8.1 m,
from (preceding table) C= 0.025,
and the drop will be: D = 0.025* (8.1) = 0.202

مثال:

لتدفق هواء 0.167m3/s عبر فتحة 500x150 مم

من الجدول التالي X = 8.1 m
من الجدول أعلاه C = 0.025
D = 0.025* 8.1 = 0.202

GRILL SELECTION :

For a required air flow, please select the grill from the performance table according to the throw, pressure drop, and noise level.

اختيار الفتحة :

يتم اختيار الفتحة المناسبة لتدفق الهواء المطلوب من جدول الاختيار بدلالة مسافة قذف الهواء ، انخفاض الضغط في الفتحة ومستوى الضجيج لها .

ETL Testing Laboratories,Inc U.S.A
ISO 9001 Certified company
Intertek Testing Services

U.S.A ETL CERTIFICATE:

شهادات ETL الخاصة بالمنتج:

Intertek

REPORT

3933 US ROUTE 11 CORTLAND, NEW YORK 13045

Order No. 100346287 Date: April 29, 2011

REPORT NO. 100346287CRT-001a

STATIC PRESSURE, SOUND POWER LEVEL, AREA FACTOR AND THROW TESTS ON A 1000 mm BY 200 mm SINGLE DEFLECTION AIR GRILLE

RENDERED TO

GAMMA LINE INTERNATIONAL
P.O. BOX 92833, RIYADH 11663
KINGDOM OF SAUDI ARABIA

INTRODUCTION

This report gives the results of tests conducted on a 1000 mm by 200 mm single deflection air grille. The test results include Static Pressure, Area Factor, Throw and Sound Power Level. The sample was selected and supplied by the client and was received at the laboratories on March 23, 2011. The sample appeared to be in new unused condition upon receipt.

AUTHORIZATION

Signed Intertek Quotation No. 500281404.

TEST METHOD

The grille was tested in accordance with the ASHRAE 70-2006 Standard "Method of Testing for Rating the Performance of Air Outlets and Inlets", which incorporates ADC 1062: GRD-84 Test Code for Grilles, Registers and Diffusers. Acoustical data was obtained employing a Bruel & Kjaer Pulse Digital Frequency Analyzer and analyzed on a Compaq Computer. The reference sound source used for this test was a calibrated Bruel & Kjaer Type 4204, which conforms to the above standard. The octave band sound power levels were plotted on graph of Noise Criteria Curves which is in the ADC Test Code. These curves are reprinted with permission from the ASHRAE Handbook and Product Directory, 1976. The grille was installed in the facility and supplied with measured volumes of air. The static pressure was measured 1½ duct diameters upstream of the grille inlet.

This report is for the exclusive use of Intertek's Client and is provided pursuant to the agreement between Intertek and its Client. Intertek's responsibility and liability are limited to the terms and conditions of the agreement. Intertek assumes no liability to any party, other than to the Client in accordance with the agreement, for any loss, expense or damage occasioned by the use of this report. Only the Client is authorized to copy or distribute this report and then only in its entirety. Any use of the Intertek name or one of its marks for the sale or advertisement of the tested material, product or service must first be approved in writing by Intertek. The observations and test results in this report are relevant only to the sample tested. This report by itself does not imply that the material, product, or service is or has ever been under an Intertek certification program. Measurement uncertainty budgets have been determined for applicable test methods and are available upon request.

Intertek

REPORT

3933 US ROUTE 11 CORTLAND, NEW YORK 13045

Order No. 100346287 Date: April 29, 2011

REPORT NO. 100346287CRT-001b

STATIC PRESSURE, SOUND POWER LEVEL, AREA FACTOR AND THROW TESTS ON A 1000 mm BY 250 mm SINGLE DEFLECTION AIR GRILLE

RENDERED TO

GAMMA LINE INTERNATIONAL
P.O. BOX 92833, RIYADH 11663
KINGDOM OF SAUDI ARABIA

INTRODUCTION

This report gives the results of tests conducted on a 1000 mm by 250 mm single deflection air grille. The test results include Static Pressure, Area Factor, Throw and Sound Power Level. The sample was selected and supplied by the client and was received at the laboratories on March 23, 2011. The sample appeared to be in new unused condition upon receipt.

AUTHORIZATION

Signed Intertek Quotation No. 500281404.

TEST METHOD

The grille was tested in accordance with the ASHRAE 70-2006 Standard "Method of Testing for Rating the Performance of Air Outlets and Inlets", which incorporates ADC 1062: GRD-84 Test Code for Grilles, Registers and Diffusers. Acoustical data was obtained employing a Bruel & Kjaer Pulse Digital Frequency Analyzer and analyzed on a Compaq Computer. The reference sound source used for this test was a calibrated Bruel & Kjaer Type 4204, which conforms to the above standard. The octave band sound power levels were plotted on graph of Noise Criteria Curves which is in the ADC Test Code. These curves are reprinted with permission from the ASHRAE Handbook and Product Directory, 1976. The grille was installed in the facility and supplied with measured volumes of air. The static pressure was measured 1½ duct diameters upstream of the grille inlet.

This report is for the exclusive use of Intertek's Client and is provided pursuant to the agreement between Intertek and its Client. Intertek's responsibility and liability are limited to the terms and conditions of the agreement. Intertek assumes no liability to any party, other than to the Client in accordance with the agreement, for any loss, expense or damage occasioned by the use of this report. Only the Client is authorized to copy or distribute this report and then only in its entirety. Any use of the Intertek name or one of its marks for the sale or advertisement of the tested material, product or service must first be approved in writing by Intertek. The observations and test results in this report are relevant only to the sample tested. This report by itself does not imply that the material, product, or service is or has ever been under an Intertek certification program. Measurement uncertainty budgets have been determined for applicable test methods and are available upon request.

ETL Testing Laboratories,Inc U.S.A
ISO 9001 Certified company
Intertek Testing Services

TECHNICAL SPECIFICATION

GAMMA LINE international

المواصفات الفنية

V		HxB	Throw (x) in m	Effective velocity	Pressure drop	NR
m3/h	m3/s	mm	at 0.25 m/s	m/s	Pa	dB
150	0.042	100x200	7.1	3.6	9	29
		100x300	3.2	2.4	4	22
200	0.056	100x200	11.9	4.8	15	33
		100x300	5.6	3.1	7	26
		100x400	3.2	2.3	4	22
250	0.069	100x200	18.2	6.0	23	37
		100x300	8.0	3.9	10	29
		100x400	4.8	2.9	6	25
		150x300	4.0	2.6	5	23
300	0.083	100x300	11.1	4.7	14	32
		100x400	6.4	3.5	8	28
		100x500	4.8	2.9	6	25
		150x300	5.6	3.1	7	26
		150x400	3.2	2.3	4	22
350	0.097	100x300	15.1	5.5	19	35
		100x400	8.8	4.1	11	30
		100x500	5.6	3.4	7	26
		150x300	7.2	3.7	9	29
		150x400	4.0	2.7	5	23
		150x500	3.2	2.3	4	22
400	0.111	100x400	11.2	4.6	14	32
		100x500	8.0	3.9	10	29
		150x400	4.8	3.1	6	25
		150x500	4.0	2.6	5	23
		200x300	4.8	3.1	6	25
		200x400	3.2	2.3	4	22
		200x500	2.4	1.9	3	19
500	0.139	100x500	12.0	4.8	15	33
		150x400	8.1	3.9	10	29
		150x500	5.7	3.2	7	26
		200x300	8.1	3.9	10	29
		200x400	4.9	2.9	6	25
		200x500	3.3	2.4	4	22
		200x600	2.5	2.0	3	19
600	0.167	100x500	16.9	5.8	21	36
		150x300	20.0	6.3	25	37
		150x400	11.3	4.7	14	32
		150x500	8.1	3.9	10	29
		150x600	5.7	3.2	7	26
		200x300	11.3	4.6	14	32
		200x400	6.5	3.4	8	28
		200x500	4.1	2.9	5	23
700	0.194	150x300	27.2	7.3	34	40
		150x400	15.3	5.4	19	35
		150x500	10.5	4.5	13	32
		150x600	7.3	3.7	9	29
		200x300	15.3	5.4	19	35
		200x400	8.2	4.0	10	29
		200x500	5.7	3.3	7	26
		200x600	4.1	2.7	5	23

ETL Testing Laboratories,Inc U.S.A
ISO 9001 Certified company
Intertek Testing Services

SINGLE DEFLECTION GRILLE Type SGI

V		HxB	Throw (x) in m	Effective velocity	Pressure drop	NR
m3/h	m3/s	mm	at 0.25 m/s	m/s	Pa	dB
800	0.222	150x300	35.3	8.4	44	42
		150x400	19.4	6.2	24	37
		150x500	13.8	5.2	17	34
		150x600	9.8	4.2	12	31
		200x300	19.4	6.2	24	37
		200x400	10.6	4.6	13	32
		200x500	7.4	3.8	9	29
		200x600	5.8	3.1	7	26
1000	0.278	150x400	30.7	7.8	38	41
		150x500	21.1	6.4	26	38
		150x600	14.7	5.3	18	35
		150x800	8.3	3.9	10	29
		200x300	29.9	7.7	37	41
		200x400	17.1	5.7	21	36
		200x500	11.5	4.8	14	32
		200x600	8.3	3.9	10	29
		200x800	5.0	2.9	6	25
		300x500	5.8	3.2	7	26
		300x600	4.2	2.6	5	23
1200	0.333	150x500	30.1	7.7	37	41
		150x600	20.5	6.4	25	37
		150x800	11.6	4.7	14	32
		200x300	42.8	9.3	53	44
		200x400	24.4	6.9	30	39
		200x500	16.4	5.7	20	35
		200x600	11.6	4.7	14	32
		200x800	6.7	3.5	8	28
		300x500	7.6	3.8	9	29
		300x600	5.1	3.1	6	25
1600	0.444	150x600	36.8	8.5	45	43
		150x800	20.7	6.3	25	37
		200x600	20.7	6.3	25	37
		200x800	11.8	4.6	14	32
		300x500	13.4	5.1	16	34
		300x600	9.4	4.2	11	30
		300x800	5.2	3.1	6	25
		400x600	5.3	3.1	6	25
2000	0.556	200x600	31.5	7.8	38	41
		200x800	17.7	5.8	21	36
		300x600	14.5	5.2	17	34
		300x800	8.7	3.8	10	29
		400x600	8.7	3.9	10	29
		400x800	5.3	2.9	6	25
2500	0.694	300x600	22.2	6.5	26	38
		300x800	13.1	4.8	15	33
		300x1000	8.9	3.9	10	29
		400x600	13.1	4.9	15	33
		400x800	7.3	3.6	8	28
		400x1000	5.5	2.9	6	25
3000	0.833	300x800	18.4	5.8	21	36
		300x1000	12.5	4.7	14	32
		400x600	18.4	5.8	21	36
		400x800	10.8	4.3	12	31
		400x1000	7.4	3.5	8	28

ETL Testing Laboratories,Inc U.S.A
ISO 9001 Certified company
Intertek Testing Services

SYRIA ARAB REPUBLIC

33435, Damascus, Syria

+963 11 585 1200

+963 94 063 0063

info.sy@gammaline.com

GAMMA LINE
international