GAMMA LINE
international

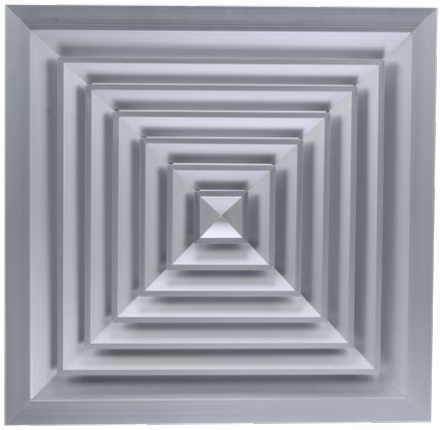

CEILING DIFFUSER

Easy Install & Visually Appealing

CEILING DIFFUSER Type GSD

FEATURES:

GSD Ceiling air diffusers are well-suited for modern architectural designs . Their square or rectangular shape is designed to complement room aesthetics.

GSD Ceiling diffusers with their fixed blades are suitable for horizontal discharge, and are typicaly mounted at ceiling level.
GSD Ceiling diffusers are used for supply,return and exhaust of air .
GSD Ceiling air diffusers consist of an outer frame, and a removable central section for easier installation, and damper adjustment.
They are designed for rooms with ceiling heights ranging from 2.40m to 3.0m for various applications. Maximum mounting height is 3.7m with temperature difference not exeed 16.5C temperature difference, with returns positioned near the floor .

المميزات الفنية:

تتناسب ناشرات الهواء السقفية طراز GSD مع التصميمات المعمارية الحديثة، حيث تم تصميم شكلها المربع أو المستطيل لاستكمال جمالية الغرفة.

تمتاز بشفراتها الثابتة المناسبة لقذف الهواء بشكل أفقي عند تركيبها على مستوى السقف.

و تستخدم كفتحات تغذية أو رجوع أو طرد للهواء.

تتألف ناشرات الهواء طراز GSD من جزئين هما الإطار و القلب القابل للفك، الذي يسهل عملية التركيب و عيار الدامبر .

و هي مصممة للغرف ذات ارتفاع سقف يتراوح من 2.4m إلى 3m لمختلف التطبيقات. الارتفاع الأعظمي الممكن تركيبه هو 3.7m عند وجود فرق درجة حرارة 16.5cعلى أن تركب فتحات رجوع الهواء بالقرب من الأرض.

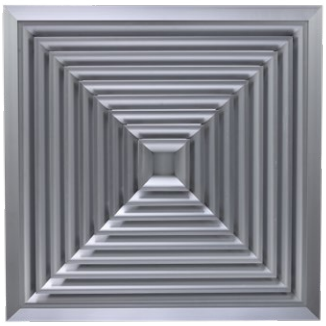

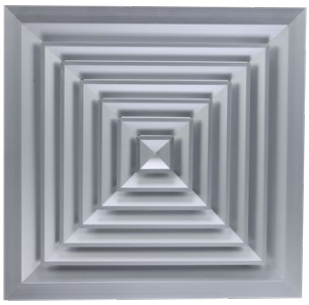

ETL Testing Laboratories,Inc U.S.A
ISO 9001 Certified company
Intertek Testing Services

GAMMA LINE international

MATERIAL:

Ceiling diffusers type GSD-N Are made from extruded aluminum profiles.
Ceiling diffusers type GSD-K Are made from specially designed extruded aluminum profiles for a featured good looking diffuser.

المواد المستخدمة:

ناشرات الهواء طراز GSD-N يتم تصنيعها من بروفيلات الألومنيوم المسحوبة.

تم تصنيع ناشرات الهواء طراز GSD-K من بروفيلات الألومنيوم المسحوبة و ذات الشكل الخاص للحصول على ناشر ذو شكل جميل و متميز.

DIMENSIONS:

GSD ceiling diffuser are available in different Dimension (B x H).
NGSD with a 75 mm pitch starts with 150x150-225x225---600x600 mm.
KGSD with 50 mm pitch starts with 150x150-200x200----600x600mm

الأبعاد:

ناشر الهواء السقفي طراز (GSD)
تصنع بقياسات مختلفة BxH تساوي الأبعاد الأسمية .
NGSD الممكن إنتاجه بتباعد 75 مم و يبدأ من
150x150-225x225----600x600 مم
KGSD الممكن إنتاجه بتباعد 50 مم و يبدأ من
150x150-200x200-----600x600 مم

CEILING DIFFUSER Type GSD

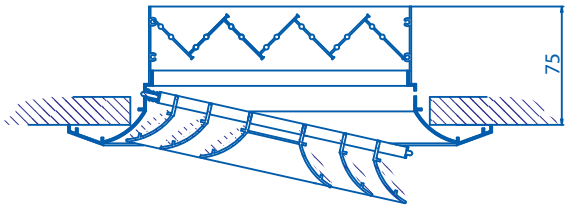

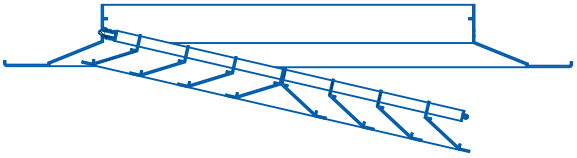

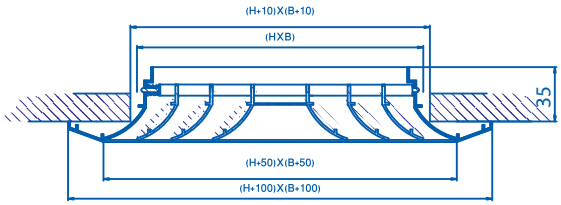

GSD-K

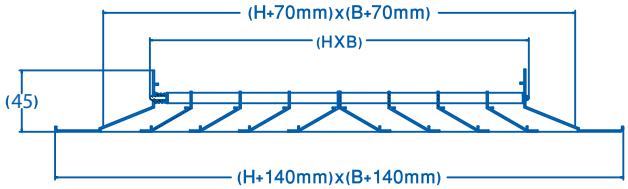

GSD-N

AVAILABLE PRODUCTS:

Four directions- square Diffuser type.

المنتجات المتوفرة:

ناشر هواء سقفي مربع بأربع إتجاهات طراز

GSD-N-ST & GSD-K-ST

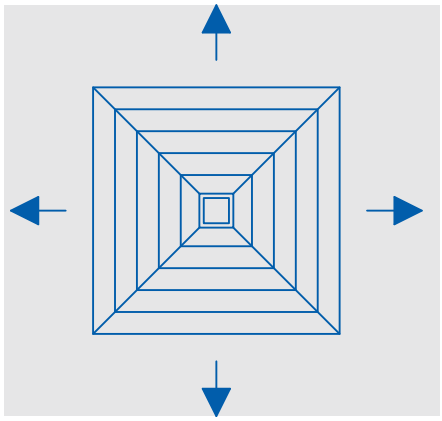



Four directions- rectangular Diffuser type.

ناشر هواء سقفي مستطيل بأربع إتجاهات طراز

GSD-N-RT , GSD-K-RT

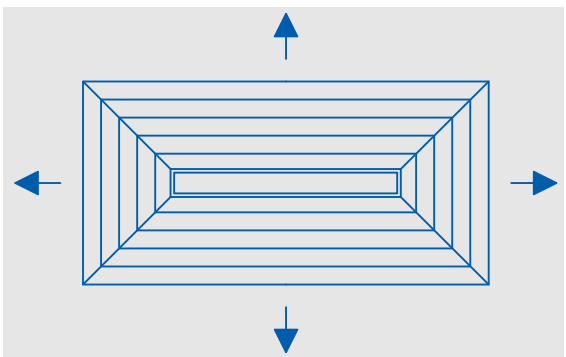



ETL Testing Laboratories,Inc U.S.A

ISO 9001 Certified company

Intertek Testing Services

Three directions- square or rectangular Diffuser type.

ناشر هواء سقفي مستطيل بثلاث إتجاهات طراز

GSD-S-3W & GSD-K-3W

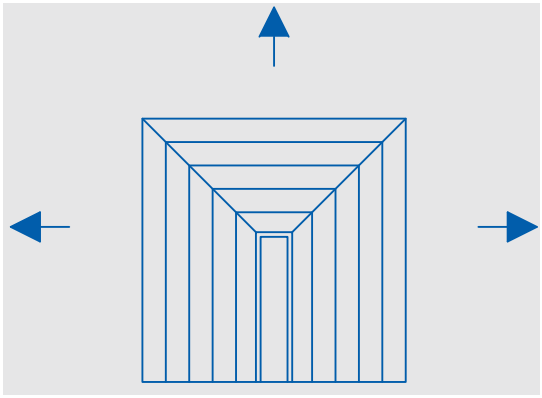



Two directions in line square or rectangular Diffuser type.

ناشر هواء سقفي مربع أو مستطيل بإتجاهين طراز

GSD-N-2WL & GSD-K-2WL (TWO WAYS IN LINE)

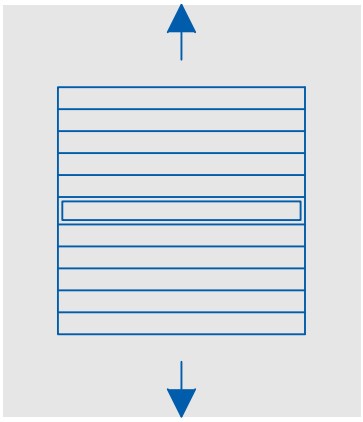



Two directions in angle square or rectangular Diffuser type.

ناشر هواء سقفي مربع أو مستطيل بإتجاهين كزاوية طراز

GSD-N-2WN & GSD-K-2WN

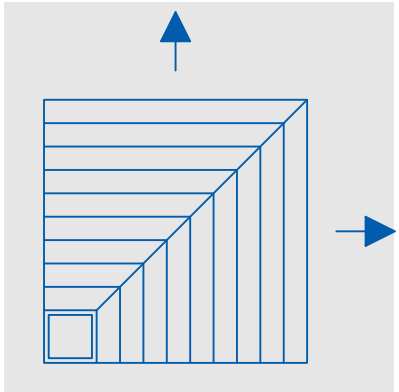

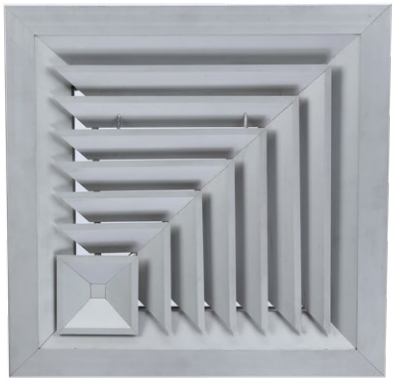

ETL Testing Laboratories,Inc U.S.A
ISO 9001 Certified company
Intertek Testing Services

CEILING DIFFUSER Type GSD

One direction-in line square or rectangular Diffuser type.

ناشر هواء سقفي مربع أو مستطيل بإتجاه واحد طراز

GSD-N-1WL & GSD-K-1WL

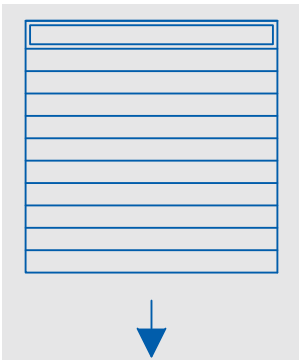



ACCESORIES:

VD: Volume control opposed-blade damper. Frame and blades are constructed from extruded aluminum.
Damper closer can be adjusted manually without removing the diffuser's core.

المتممات

VD: دامبر عياري للهواء ذو شفرات متعاكسة. يتم تصنيع إطار الدامبر و الشفرات من بروفيلات الألومنيوم.

ويتم التحكم بمعير الهواء بإستخدام ذراع خارجي دون الحاجة لإزالة قلب الناشر .

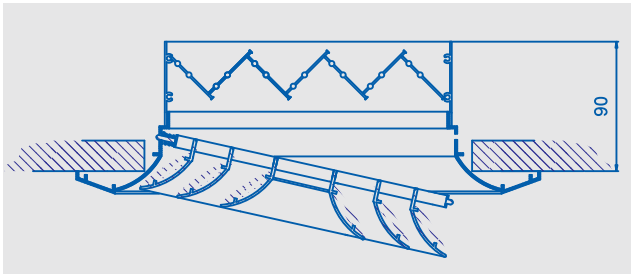



BO: Specially designed boxes constructed from galvanized sheets. Optional flow rate control dampers can be included for optimal supply characteristics.

BO: صندوق مصمم خصيصا مصنع من صفائح الفولاذ المغلفن و يمكن تزويدها عند الطلب بدامبر عياري للتحكم في معدل تدفق الهواء و ذلك للحصول على تدفق هواء مثالي.

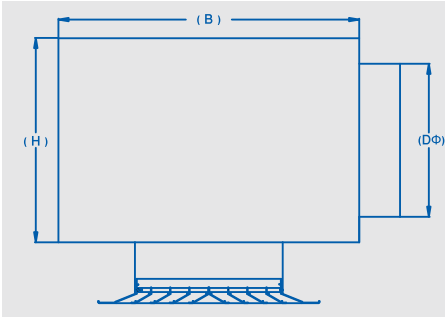

Nominal Dimension (m.m)	H	B	DΦ
150x150	200	250	150
225x225	300	330	250
300x300	350	400	300
370x370	400	500	350
450x450	450	550	400

ETL Testing Laboratories,Inc U.S.A
ISO 9001 Certified company
Intertek Testing Services

FINISHING:

These Diffusers are available in Aluminum natural anodized color, or the diffuser surfaces can be treated and finished with electrostatic powder coating in RAL colors, and curing oven

الإنهاء:

يمكن إنتاج هذا النوع من الناشرات بلون الألمنيوم المؤكسد فضي الطبيعي أو تتم معالجة الأسطح ثم طلائها باستخدام البودرة الالكتروستاتيكية الحرارية، ثم الشواء بالفرن، اللون القياسي المستخدم هو أي لون من مجموعة RAL.

INSTALLATION:

Installation of GSD ceiling diffusers do not require special counter frames; they can be secured with the duct using regular screws inserted laterally through the neck of the diffuser.

التركيب:

تركيب الناشر طراز GSD لا يتطلب إلى أي إطارات إضافية، و يتم تثبيته بواسطة براغي أفقية تقوم بتثبيت رقبة اطار ألناشر على عنق مجرى الهواء.

TECHNICAL CHARACTERISTICS :

Performance table shows
AIR throw measured in meters.
Pressure drop measured in Pascal.
Noise level measured in decibels.
Depending on a certain air flow passing through a Diffuser with BxH dimensions.
The parameters are for supply diffusers with temperature difference of 10 degree Celsius between supply air and room temperature, in a cooling cycle.

When volume control Damper is partially closed for balancing or controlling air flow along with pressure drop and sound correction, the throw pattern will be reduced by 10 to 18% depending on the amount of throttling . Pressure drop will increase accordingly.

المواصفات الفنية :

جدول المواصفات الفنية يبين
مسافة قذف الهواء بالمتر .
انخفاض الضغط بالباسكال.
مستوى الضجيج بالدسبل.

و ذلك لتدفق هواء معين يمر عبر ناشر الهواء بأبعاد (B X H)

القيم المذكورة هي لناشرات التغذية و عند فرق درجة الحرارة في دورة التبريد بين هواء التغذية و هواء الغرفة يبلغ 10درجات مئوية

عند إغلاق معير الهواء جزئيا لتحقيق التوازن و التحكم بتدفق الهواء بالإضافةللتأثر الحاصل على فرق الضغط و الضجيج في الفتحة ستتأثر مسافة قذف الهواء بنسبة بين 10 إلى 18 % اعتمادا على مقدرا انغلاق المعير . كما سيزداد انخفاض الضغط وفقا لذلك. .

DIFFUSER SELECTION :

Please refer to the performance table to select the appropriate diffuser based on throw, pressure drop, and noise level for the required air flow.

اختيار الناشر:

يرجى الرجوع إلى جدول الإختيار لتحديد ناشر الهواء لمناسب بناء على مافة القذف و انخفاض الضغط و مستوى الضجيج لتدفق الهواء المطلوب

ETL Testing Laboratories,Inc U.S.A
ISO 9001 Certified company
Intertek Testing Services

U.S.A ETL CERTIFICATE:

شهادات ETL الخاصة بالمنتج:

ITS No. 100346287CRT-004g & 004h

Intertek

Performance Test Certificate

Issued To

GAMMA LINE INTERNATIONAL
P.O. BOX 92833, RIYADH 11663
KINGDOM OF SAUDI ARABIA

Intertek has tested representative samples of
Gamma Line International
3 Way Throw Square Diffusers

3 Way Throw Square Diffusers (375mm sq. & 450mm sq.) were tested
in accordance with the standards listed below and were found
to perform in a manner appropriate to the dictates of the standards.

STANDARDS

ASHRAE 70-2006 "Method of Testing for Rating
the Performance of Air Outlets and Inlets"

ADC 1062: GRD-84 "Test Code for Grilles, Registers and Diffusers"

SCOPE OF TESTING

The diffusers were tested for the following performance characteristics:
"Reference Intertek Reports Number 100346287CRT-004g & 004h dated May 24, 2011"

A) Sound Power Level ((NC)
B) Air Velocity versus Static Pressure
C) Area Factor
D) Throw Pattern

Date: June 13, 2011

James R. Kline
Intertek
Engineer / Quality Supervisor

This Verification is for the exclusive use of Intertek's Client and is provided pursuant to the agreement between Intertek and its Client. Intertek's responsibility and liability are limited to the terms and conditions of the agreement. Intertek assumes no liability to any party, other than to the Client in accordance with the agreement, for any loss, expense or damage occasioned by the use of this Verification. Only the Client is authorized to copy or distribute this Verification. Any use of the Intertek name or one of its marks for the sale or advertisement of the tested material, product or service must first be approved in writing by Intertek. The observations and test results referenced from this Verification are relevant only to the sample tested. This Verification by itself does not imply that the material, product, or service is or has ever been under an Intertek certification program.

ITS No. 100346287CRT-004c & 004d

Intertek

Performance Test Certificate

Issued To

GAMMA LINE INTERNATIONAL
P.O. BOX 92833, RIYADH 11663
KINGDOM OF SAUDI ARABIA

Intertek has tested representative samples of
Gamma Line International
1Way Throw Square Diffusers

1 Way Throw Square Diffusers (225mm sq. & 300mm sq.) were tested
in accordance with the standards listed below and were found
to perform in a manner appropriate to the dictates of the standards.

STANDARDS

ASHRAE 70-2006 "Method of Testing for Rating
the Performance of Air Outlets and Inlets"

ADC 1062: GRD-84 "Test Code for Grilles, Registers and Diffusers"

SCOPE OF TESTING

The diffusers were tested for the following performance characteristics:
"Reference Intertek Reports Number 100346287CRT-004a & 004b dated April 29, 2011"

A) Sound Power Level ((NC)
B) Air Velocity versus Static Pressure
C) Area Factor
D) Throw Pattern

Date: June 13, 2011

James R. Kline
Intertek
Engineer / Quality Supervisor

This Verification is for the exclusive use of Intertek's Client and is provided pursuant to the agreement between Intertek and its Client. Intertek's responsibility and liability are limited to the terms and conditions of the agreement. Intertek assumes no liability to any party, other than to the Client in accordance with the agreement, for any loss, expense or damage occasioned by the use of this Verification. Only the Client is authorized to copy or distribute this Verification. Any use of the Intertek name or one of its marks for the sale or advertisement of the tested material, product or service must first be approved in writing by Intertek. The observations and test results referenced from this Verification are relevant only to the sample tested. This Verification by itself does not imply that the material, product, or service is or has ever been under an Intertek certification program.

ITS No. 100346287CRT-004a & 004b

Intertek

Performance Test Certificate

Issued To

GAMMA LINE INTERNATIONAL
P.O. BOX 92833, RIYADH 11663
KINGDOM OF SAUDI ARABIA

Intertek has tested representative samples of
Gamma Line International
2 Way Throw Square Diffusers
(opposite and adjacent corners)

2 Way Throw Square Diffusers (300mm sq.) were tested
in accordance with the standards listed below and were found
to perform in a manner appropriate to the dictates of the standards.

STANDARDS

ASHRAE 70-2006 "Method of Testing for Rating
the Performance of Air Outlets and Inlets"

ADC 1062: GRD-84 "Test Code for Grilles, Registers and Diffusers"

SCOPE OF TESTING

The diffusers were tested for the following performance characteristics:
"Reference Intertek Reports Number 100346287CRT-004c & 004d dated April 29, 2011"

A) Sound Power Level ((NC)
B) Air Velocity versus Static Pressure
C) Area Factor
D) Throw Pattern

Date: June 13, 2011

James R. Kline
Intertek
Engineer / Quality Supervisor

This Verification is for the exclusive use of Intertek's Client and is provided pursuant to the agreement between Intertek and its Client. Intertek's responsibility and liability are limited to the terms and conditions of the agreement. Intertek assumes no liability to any party, other than to the Client in accordance with the agreement, for any loss, expense or damage occasioned by the use of this Verification. Only the Client is authorized to copy or distribute this Verification. Any use of the Intertek name or one of its marks for the sale or advertisement of the tested material, product or service must first be approved in writing by Intertek. The observations and test results referenced from this Verification are relevant only to the sample tested. This Verification by itself does not imply that the material, product, or service is or has ever been under an Intertek certification program.

ETL Testing Laboratories,Inc U.S.A
ISO 9001 Certified company
ITS Intertek Testing Services

U.S.A ETL CERTIFICATE:

شهادة ETL الخاصة بالمنتج:

ETL Testing Laboratories,Inc U.S.A
ISO 9001 Certified company
Intertek Testing Services

Performance Test Certificate

Issued To

GAMMA LINE INTERNATIONAL
P.O. BOX 92833, RIYADH 11663
KINGDOM OF SAUDI ARABIA

Intertek has tested representative samples of
Gamma Line International
4 Way Throw GSD Square Diffusers

4 Way Throw GSD Square Diffusers (150, 225, 300, 375, 450, 525 and 600mm.) were tested in accordance with the standards listed below and were found to perform in a manner appropriate to the dictates of the standards.

STANDARDS

ASHRAE 70-1991 “Method of Testing for Rating the Performance of Air Outlets and Inlets”

ADC 1062: GRD-84 “Test Code for Grilles, Registers and Diffusers”

SCOPE OF TESTING

The diffusers were tested for the following performance characteristics:
"Reference Intertek Report Number 3102706CRT-001 dated October 31, 2006”

A) Sound Power Level ((NC)
B) Air Velocity versus Static Pressure
C) Area Factor
D) Throw Pattern

Date: June 13, 2011

James R. Kline

James R. Kline
Intertek
Engineer / Quality Supervisor

This Verification is for the exclusive use of Intertek's Client and is provided pursuant to the agreement between Intertek and its Client. Intertek's responsibility and liability are limited to the terms and conditions of the agreement. Intertek assumes no liability to any party, other than to the Client in accordance with the agreement, for any loss, expense or damage occasioned by the use of this Verification. Only the Client is authorized to copy or distribute this Verification. Any use of the Intertek name or one of its marks for the sale or advertisement of the tested material, product or service must first be approved in writing by Intertek. The observations and test results referenced from this Verification are relevant only to the sample tested. This Verification by itself does not imply that the material, product, or service is or has ever been under an Intertek certification program.

TECHNICAL SPECIFICATION

المواصفات الفنية

GAMMA LINE international

GSD Square Ceiling Diffuser		PERFORMANCE DATA									
Nom.Neck Size (mm)	Jet Velocity	m/s	4.0	5.0	6.0	7.0	8.0	9.0	10.0	11.0	12.0
A=(Area m ^{2})	Nom. Neck Velocity	m/s	1.5	1.8	2.2	2.6	2.9	3.3	3.6	4.0	4.4
150 A=(0.023) Ak= .0088	Flow	(m^3/s)	0.035	0.044	0.053	0.062	0.071	0.079	0.088	0.097	0.106
		(m^3/ h)	127	159	191	222	254	286	318	349	381
	Pt	(Pa)	8.96	13.8	19.7	26.6	32.4	41.1	52.3	64.0	75.8
	NC	NC	<20	<20	23	27	31	34	37	40	42
	Throw	(m)	1-2-3	1-2-3	2-2-4	2-3-4	2-3-4	2-3-4	2-3-5	2-3-5	2-3-5
225 A=(0.051) Ak= .0187	Flow	(m^3/s)	0.075	0.093	0.112	0.131	0.149	0.168	0.187	0.205	0.224
		(m^3/ h)	269	336	403	471	538	605	672	739	807
	Pt	(Pa)	8.69	12.9	18.7	24.9	32.4	39.8	49.8	59.8	74.7
	NC	NC	<20	<20	24	28	32	35	38	41	43
	Throw	(m)	2-3-4	2-3-5	2-4-5	3-4-6	3-4-6	3-4-6	3-5-7	3-5-7	4-5-7
300 A=(0.09) Ak= .0318	Flow	(m^3/s)	0.127	0.159	0.191	0.222	0.254	0.286	0.318	0.349	0.381
		(m^3/ h)	458	572	686	801	915	1029	1144	1258	1373
	Pt	(Pa)	7.96	12.3	17.7	23.9	31.1	39.2	48.3	58.2	69.1
	NC	NC	<20	20	25	29	33	36	39	42	45
	Throw	(m)	3-4-6	3-4-6	3-5-7	4-5-7	4-5-8	4-6-8	4-6-9	5-6-9	5-7-10
375 A=(0.141) Ak= .0514	Flow	(m^3/s)	0.205	0.257	0.308	0.360	0.411	0.462	0.514	0.565	0.616
		(m^3/ h)	740	925	1110	1295	1480	1665	1849	2034	2219
	Pt	(Pa)	7.97	11.6	16.8	22.9	30.0	38.1	47.1	57.1	68.1
	NC	NC	<20	21	26	31	35	38	41	44	47
	Throw	(m)	3-5-7	4-5-8	4-6-9	5-7-9	5-7-10	6-7-11	6-8-11	6-8-12	7-9-12
450 A=(0.203) Ak= .0766	Flow	(m^3/s)	0.307	0.383	0.460	0.536	0.613	0.690	0.766	0.843	0.920
		(m^3/ h)	1104	1380	1655	1931	2207	2483	2759	3035	3311
	Pt	(Pa)	8.22	12.2	17.5	23.8	31.1	39.3	48.5	58.6	69.7
	NC	NC	<20	22	28	33	37	40	43	46	49
	Throw	(m)	4-6-9	5-7-10	6-7-11	6-8-11	7-9-12	7-9-13	7-10-14	8-10-14	8-11-15
525 A=(0.276) Ak= .0976	Flow	(m^3/s)	0.391	0.488	0.586	0.683	0.781	0.879	0.976	1.074	1.172
		(m^3/ h)	1406	1757	2109	2460	2812	3163	3515	3866	4218
	Pt	(Pa)	8.22	12.5	17.7	24.9	32.4	39.8	49.3	59.0	72.2
	NC	NC	<20	23	30	34	39	41	45	48	50
	Throw	(m)	5-7-10	6-8-11	6-8-12	7-9-13	7-10-14	8-10-15	9-11-15	9-12-16	9-12-17
600 A=(0.360) Ak= .1240	Flow	(m^3/s)	0.496	0.620	0.744	0.868	0.992	1.116	1.240	1.364	1.488
		(m^3/ h)	1786	2232	2679	3125	3572	4018	4465	4911	5358
	Pt	(Pa)	8.47	12.9	17.9	25.4	32.9	41.1	49.8	59.5	73.5
	NC	NC	<20	24	31	36	40	43	47	50	52
	Throw	(m)	6-8-11	7-9-12	7-10-13	8-10-15	9-11-16	9-12-16	10-13-17	10-13-18	11-14-19

Pressure:

Pt, Total Pressure, measured in the supply dact (Pa).

Pv, Velocity Pressure, may be calculated (@ std. conditions) as : (0.6x(Flow/Area)2) (Pa).

Ps, Static Pressure in the supply duct, may be calculated by subtracting the velocity pressure from the total pressure:

Ps= Pt - Pv

Sound Levels:

NC is noise criteria curve that will not be exceeded at the operating point.

This is determined by assuming a 10dB (ref: 10-12 watts) room attenuation that is subtracted from the power levels in each of 2nd through 7th octave bands.

Throw:

The numbers shown are throw distances, in meters, relating to terminal velocites of 0.76-0.51-0.25 meter per seconds, with the jet attached to the ceiling surface.

Jet Velocity, may be calculated as: flow /nominal duct area (m/s).

Area Factor, Ak

Calculated as the Flow/ Jet Velocity, used in field balancing (m2).

Test Standard:

-ANSI/ASHRAE Standard 70

-Isothermal conditions

ETL Testing Laboratories,Inc U.S.A
ISO 9001 Certified company
Intertek Testing Services

CEILING DIFFUSER Type GSD

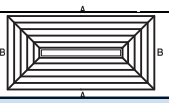

Air Flow m^3/h	Nominal dimensions HxB (mm)	Throw		Effective Velocity Vk (m/S)	Sound Level (dB)
		LtA (m)	LtB (m)		
150	150x225	1.6	1.2	3.2	20
200	150x225	2.2	1.6	4.2	25-30
	150x300	2.0	1.2	3.4	20-25
250	150x225	2.8	2.0	5.3	30-35
	150x300	2.5	1.5	4.3	25-30
	150x375	2.6	1.3	3.4	20-25
300	150x225	3.4	2.4	6.4	40-45
	150x300	3.0	1.8	5.2	25-30
	150x375	3.0	1.5	4.1	25-30
	225x300	2.4	1.8	3.4	20-25
350	150x300	3.4	2.0	6.0	30-35
	150x375	3.5	1.7	4.8	25-30
	225x300	2.6	2.0	4.0	25-30
	225x375	2.5	1.6	3.3	25-25
400	150x300	4.0	2.4	6.9	35-40
	150x375	4.1	2.0	5.5	30
	225x300	3.0	2.3	4.6	25-30
	225x375	2.9	1.9	3.8	20-25
	225x450	2.7	1.6	3.0	20
500	150x375	5.0	2.5	6.9	35-40
	225x300	3.6	2.8	5.7	30-35
	225x375	3.4	2.4	4.7	25-30
	225x450	3.0	1.8	3.7	20-25
	300x375	2.9	2.3	3.3	20-25
	225x525	2.5	1.6	3.3	20-25
600	225x300	4.4	3.4	6.9	35-40
	225x375	3.8	2.6	5.7	30-35
	225x450	4.0	2.4	4.5	25-30
	225x525	3.6	2.0	4.0	25-30
	300x375	3.3	2.8	3.9	25-30
	300x450	3.0	2.2	3.3	20-25
800	225x450	5.0	2.8	6.0	30-35
	225x525	4.8	2.6	5.4	30-35
	300x375	4.2	3.5	5.2	30-35
	300x450	4.2	3.0	4.4	25-30
	300x525	4.1	2.5	3.8	20-25
	300x600	4.2	2.4	3.2	20-25
	375x450	3.4	2.8	3.6	20-25
1000	225x525	5.8	3.1	6.7	40-45
	300x375	5.7	4.7	6.6	35-40
	300x450	5.4	3.8	5.5	30-35
	300x525	5.4	3.4	4.7	30
	300x600	5.0	2.7	4.0	25-30
	375x450	4.6	3.8	4.5	25-30
1200	300x450	6.2	4.6	6.6	35-40
	300x525	6.0	3.8	5.7	30-35
	300x600	6.0	3.4	4.9	35
	375x450	5.0	4.2	5.4	30-35
	375x600	4.6	3.4	3.7	20-25
1400	300x525	7.6	4.6	6.7	35-40
	300x600	6.0	3.4	5.7	30-35
	375x450	5.1	4.2	6.3	35-40
	375x525	4.6	3.4	4.3	20-25
	450x600	5.0	4.2	3.8	30
1600	300x600	8.0	4.4	6.5	35-40
	375x600	6.1	4.3	5.0	30-35
	450x600	5.7	4.7	4.3	25-30
1800	375x450	8.0	6.6	7.2	40-45
	375x600	7.0	5.0	5.6	35-40
	450x600	6.3	5.1	4.9	35
2000	375x600	8.0	5.8	6.3	35-40
	450x600	7.4	5.8	5.4	30-35
2400	450x600	8.4	7.0	6.5	40-45

ETL Testing Laboratories,Inc U.S.A
ISO 9001 Certified company
Intertek Testing Services

SYRIA ARAB REPUBLIC

33435, Damascus, Syria

+963 11 585 1200

+963 94 063 0063

info.sy@gammaline.com

GAMMA LINE
international